Applied Business and Administration Journal (ABAJ)
Vol. 04, No. 01, January 2025, pp.22-36
ISSN: 2828-0040

Structural Model Analysis of Electric Vehicle Usage Decisions as an Implementation of Sustainable Development Goals (SDGs) in Society 5.0

Jajat Lesmana

STIE Wibawa Karta Raharja

Article Info

Article history:

Received 10 23, 2024
Revised 12 17, 2024
Accepted 01 07, 2025

Keywords:

Sustainable Development Goals (SDGs)
Electric vehicle
Green Marketing
Quality
Brand Image

ABSTRACT

Aims the increasingly pressing issue of climate change, electric vehicles have emerged as one of the promising solutions to reduce greenhouse gas emissions and achieve the Sustainable Development Goals (SDGs). In the context of sustainable development, the transition to more environmentally friendly transportation is becoming increasingly important. Behind its popularity, there are complex factors that influence consumer decisions in choosing and using electric vehicles. The most fundamental question is on what basis do consumers prefer electric vehicles. Data collection was carried out using purposive sampling of 233 respondents. The respondent criteria were male or female who were stated to be at least 17 years old, either having an electric vehicle or not having an electric vehicle. Data were collected using a questionnaire with a Likert scale of 1-7. Data were analyzed using SmartPLS 3 software to model structural equations between variables. The results showed that the decision to use electric vehicles (Y) was directly influenced by Green Marketing (X1), Quality (X2) and Brand Image (Z1) by 66.7%. At the structural level, the Decision to Use Electric Vehicles (Y) is most significantly influenced (p-value 0.001 < 0.05) by Green Purchase Intention (Z1) and Brand Image (Z2) with a path coefficient of 0.117.

Corresponding Author:

Jajat Lesmana
STIE Wibawa Karta Raharja, jl. Jend Ahmad Yani No.21, Nagri Tengah, kec. Purwakarta, Jawa Barat 41114, jajatlesmana1@gmail.com, 089531886166

INTRODUCTION

The development of electric vehicle technology has been increasingly rapid in recent years, bringing us into the era of society 5.0 where the physical world is seemingly connected. This massive digital transformation has not only changed the way we live and work, but also presents great opportunities to address various global challenges. One of the innovations in the spotlight is electric vehicles. Amid the increasingly pressing issue of climate change, electric vehicles have emerged as one of the promising solutions to reduce greenhouse gas emissions and achieve the Sustainable Development Goals (SDGs). In the context of sustainable development, the transition to more environmentally friendly transportation is becoming increasingly important (Kurniawan & Husin, 2023). Electric vehicles, with their potential to reduce emissions and reliance on fossil fuels, offer an attractive solution. This analysis will explore how individual and organizational decisions to adopt electric vehicles are influenced by a range of factors, including government policy, environmental awareness, availability of charging infrastructure, and cost of ownership (Dharmawan et al., 2021).

Applied Business and Administration Journal (ABAJ)
Vol. 04, No. 01, January 2025, pp.22-36
ISSN: 2828-0040

Electric vehicles (EVs) have long been recognized as an innovative solution to address global climate change, which is increasingly gaining global attention, particularly at the 2022 G20 Summit in Bali. Quoted from (Ministry of Transportation, 2023) One of the government's policies to support this is the issuance of Presidential Regulation Number 55 of 2019 concerning the Acceleration of the Use of Electric Vehicles and Presidential Instruction No. 7 of 2022 concerning the Use of Battery-Based Electric Motor Vehicles (KBLBB) as official vehicles. To accelerate the implementation of electric vehicles in Indonesia, the government is targeting KBLBB production with the aim of reaching 400,000 four-wheeled vehicles and 1.76 million two-wheeled vehicles in 2025, and 600,000 four-wheeled vehicles and 2.45 million two-wheeled vehicles in 2030. Meanwhile, the use of fuel-powered motor vehicles is still dominant with 152 million units, including 126 million motorcycles, 19 million passenger cars, and goods vehicles.

Based on data from Kemenkomarves, the trend of increasing GDP in Indonesia from 2010 to 2019 was around ± 5% per year. In the same period, the number of electric vehicles in Indonesia increased by around ± 8% per year, indicating a relationship between increasing GDP and people's purchasing power for new vehicles. Kemenkomarves projects the need for 4-wheeled electric vehicles of 2 million units and 2-wheeled vehicles of 26 million units by 2030 (Ministry of Transportation, 2023). If we compare the vehicle life cycle patterns in Indonesia with other countries, Indonesians tend to replace vehicles every 5 years, faster than the United States which replaces vehicles every 11.5 years. With this assumption, the transition to electric vehicles in Indonesia can run smoothly.(Shiddiq, 2024).

Table 1. Number of electric vehicle users worldwide
Source: www.Statista.com

Year	Plug-in hybrid electric (in millions)	Battery electric (in millions)
2016	808.18	1,191.48
2017	1,205.61	1,937.27
2018	1,834.97	3,264.8
2019	2,377.46	4,773.12
2020	3,372.73	6,871.65
2021	5,224.04	11,274.71
2022	7,900	18,000

Researchers have attempted to examine the factors that influence individual and organizational decisions to adopt electric vehicles, as well as their implications for achieving the SDGs, particularly the goal of clean and affordable energy. Behind its popularity, there are complex factors that influence consumer decisions in choosing and using electric vehicles. The most fundamental question is on what basis do consumers prefer electric vehicles. One way to attract consumer interest is by implementing a marketing strategy (Yaputra et al., 2023). Considering that electric vehicles are a relatively new type of vehicle in society, what is the right marketing strategy to build consumer trust to switch to using environmentally friendly products in the form of electric vehicles.

The results of this study are expected to contribute to policy makers, electric vehicle manufacturers, and marketers in designing more effective strategies to encourage the adoption of electric vehicles. In addition, this study can also provide insight for consumers in making more informed purchasing decisions. This study is relevant considering the

increasingly stringent government regulations regarding vehicle emissions and increasing public awareness of the importance of the environment. By understanding the factors that influence consumer decisions, it can be expected that there will be an increase in the use of electric vehicles in the future.

LITERATURE REVIEW

Green marketing is an approach to marketing that pays close attention to the impact of a product or service on the environment. It is not just a claim, but involves the entire process of production, distribution, and use of the product (Osiyo & Samuel, 2018). The main goal is to create environmentally friendly products and services, and encourage consumers to choose products that are more responsible for the earth. In line with (Yahya, 2022) Green marketing is an approach to promoting environmentally friendly products. It includes activities such as redesigning products, changing production processes, updating packaging and adapting advertising. Green marketing reflects a manufacturer's commitment to long-term environmental protection.

Green purchase intention is a person's desire or tendency to buy products or services that are considered environmentally friendly. This is not just an ordinary interest, but a serious intention to take real action in choosing products that are better for the environment (Kusumawati & Tiarawati, 2022). Furthermore, according to (Resmawa, 2017)The more a person is aware of the importance of protecting the environment, the more likely they are to choose green products. People who have values such as caring for the environment, health, and social welfare are more likely to choose green products.

Brand image is a perception or picture formed in the minds of consumers regarding a brand (Resmawa, 2017). Think of a brand as an individual, brand image is the personality, character, and reputation attached to that individual. A unique and strong brand image will help a brand stand out in the midst of many choices available. Consumers who have a positive perception of a brand tend to be more loyal and will continue to buy products or services from that brand (Prasetyo & Wibowo, 2023). Brands with a strong image will find it easier to launch new products because consumers already have trust in the brand (Osiyo & Samuel, 2018).

Quality is a concept that describes how good or bad something is (Saidani, 2019). Simply put, quality is a measure of how well a product, service, or process meets or exceeds customer expectations and needs. Quality applies not only to physical products such as cars, but also to services. For example, the quality of customer service is determined by how quickly and friendly the service is provided, how effectively customer problems are resolved, and how satisfied customers are with their interactions with the company (Prasetyo & Wibowo, 2023). In general, quality is a dynamic and evolving concept. Quality standards continue to improve as consumer needs and expectations change. Companies that want to be successful must continually strive to improve the quality of their products and services.

The decision to use an electric vehicle is a long-term investment that is not only beneficial for yourself, but also for the environment and society. With all the advantages offered, electric vehicles are increasingly becoming an attractive choice for consumers who are environmentally conscious and want to contribute to creating a more sustainable future (Saidani, 2019). The decision to switch to electric vehicles is an increasingly popular move around the world, driven by several important factors. Electric vehicles produce no exhaust emissions, thus significantly reducing air pollution, especially in dense urban areas. The use of fossil fuels in conventional vehicles is one of the main causes of greenhouse gas emissions that contribute to climate change. Electric vehicles help reduce these emissions.

Applied Business and Administration Journal (ABAJ)
Vol. 04, No. 01, January 2025, pp.22-36
ISSN: 2828-0040

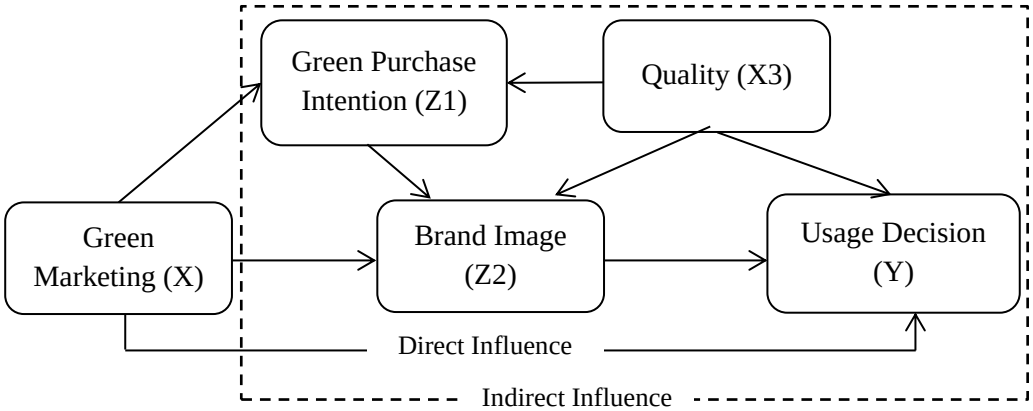

Figure 1. Conceptual Framework

Based on the literature review and the conceptual framework that has been built, there are direct and indirect influences that cause someone to switch to using electric vehicles. The research hypothesis can be seen as follows.

H_1: There is a direct influence of Green Marketing (X1) onGreen Purchase Intention (Z1).
H_2: There is a direct influence of Green Marketing (X1) on Brand Image (Z2).
H_3: There is a direct influence of Green Marketing (X1) on the Decision to Use Electric Vehicles (Y).
H_4: There is a direct influence of Quality (X2) onGreen Purchase Intention (Z1).
H_5: There is a direct influence of Quality (X2) on Brand Image (Z2).
H_6: There is a direct influence of Quality (X2) on the Decision to Use Electric Vehicles (Y).
H_7: There is a direct influence of GreenPurchase Intention (Z1) towardsBrand Image (Z2).
H_8: There is a direct influence of Brand Image (Z2) on the Decision to Use Electric Vehicles (Y).
H_9: There is an indirect influence of Green Marketing (X1) on the Decision to Use Electric Vehicles (Y) through GreenPurchase Intention (Z1) and Brand Image (Z2).
H_{10}: There is an indirect influence of Green Marketing (X1) on the Decision to Use Electric Vehicles (Y)through Brand Image (Z2).
H_{11}: There is an indirect influence of Quality (X2) on the Decision to Use Electric Vehicles (Y) through GreenPurchase Intention (Z1) and Brand Image (Z2).
H_{12}: There is an indirect influence of Quality (X2) on the Decision to Use Electric Vehicles (Y) throughBrand Image (Z2).
H_{13}: There is an indirect influence of Green Marketing (X1) on Brand Image (Z2) through Green Purchase Intention (Z1).
H_{14}: There is an indirect influence of Quality (X2) on Brand Image (Z2) through Green Purchase Intention (Z1).
H_{15}: There is an indirect influence of Green Purchase Intention (Z1) on Usage Decisions (Y) through Brand Image (Z2).

Applied Business and Administration Journal (ABAJ)
Vol. 04, No. 01, January 2025, pp.22-36
ISSN: 2828-0040

METHODS

Data collection was carried out using purposive sampling, where only respondents who met the criteria would be used as research samples (Sugiyono, 2017). The respondent criteria are male or female who are stated to be at least 17 years old, either having an electric vehicle or not having an electric vehicle. Data were collected using a questionnaire with a Likert scale of 1-7. The minimum number of samples was calculated using Gpower 3.1.9.7 software with provisions that are also recommended by (Ringle et al., 2014) namely at a 5% error level assuming an effect size(f^2)medium value of 0.15, power 0.8 and the number of predictors based on the construct that is most affected by many arrows($1 - \beta\ err\ prob$) (Ringle et al., 2014). In Figure 2, it can be seen that the latent variable Decision to Use (Y) is subject to 3 arrows.

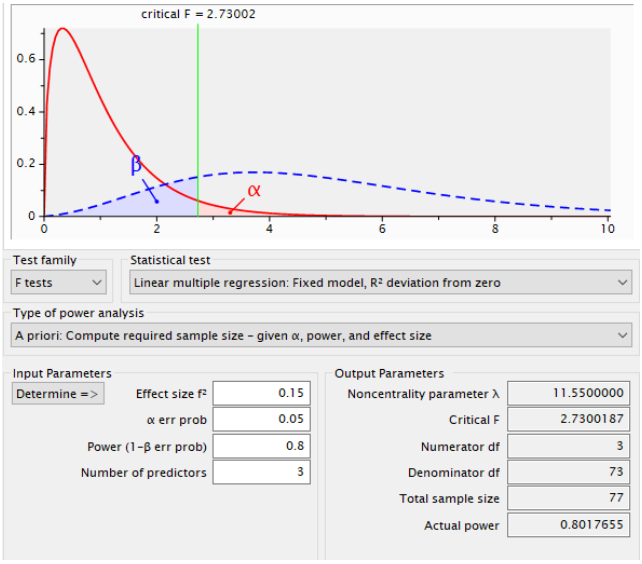

Figure 2. Gpower output minimum number of samples

Based on Figure 3, it can be seen that the minimum number of samples required is 77 respondents. To obtain more consistent and interpretive results, this number can be increased or doubled (Ringle et al., 2014). In this study, researchers took 233 respondents.

Data were analyzed using SmartPLS software version 3.2.9 to model structural equations between variables. Structural equation modeling allows researchers to test causal hypotheses and describe how variables influence each other.

RESULTS AND DISCUSSION

A. Evaluation of Measurement Model

Evaluation of the measurement model is carried out to see the quality of the indicators used in measuring the observed variables. At this stage, convergent validity and discriminant validity testing are carried out (Kurniawan & Husin, 2023).

Convergent validity

Convergent validity is used to see the quality of indicators in measuring observed variables/constructs (Alrizki & Dewi, 2024). In convergent validity, the provision applies that an indicator is declared valid if it has an outer loading > 0.70. To measure the consistency of the indicator, Chronbach's Alpha and Composite Reliability are used with the provision > 0.70 and AVE > 0.5 (Hair et al., 2013).

Applied Business and Administration Journal (ABAJ)
Vol. 04, No. 01, January 2025, pp.22-36
ISSN: 2828-0040

Table 2. Convergent validity and reliability

Variables	Indicator	Outer Loading	Chronbach's Alpha	Composite Reliability	AVE
Usage Decision (Y)	kep_1	0.869	0.890	0.932	0.821
	kep_3	0.875			
	kep_4	0.971			
Green Marketing (X1)	mark_1	0.881	0.872	0.921	0.796
	mark_2	0.879			
	mark_6	0.916			
Brand Image (Z2)	brand_1	0.853	0.897	0.928	0.765
	brand_3	0.831			
	brand_5	0.870			
	brand_6	0.940			
Green Purchase Intention (Z1)	purch_3	0.884	0.909	0.936	0.785
	purch_4	0.855			
	purch_5	0.900			
	purch_6	0.905			
Quality (X2)	qual_1	0.922	0.882	0.927	0.809
	qual_2	0.901			
	qual_3	0.874			

Based on the measurement results, all indicators are stated to meet convergent validity with outer loading > 0.70. In the consistency measurement, it can be seen that the variablesDecision to Use (Y), Green Marketing (X1), Brand Image (Z2), Green Purchase Intention (Z1) and Quality (X2) have Chronbachs Alpha and Composite Reliability values > 0.70 and AVE > 0.5.

Discriminant validity

Discriminant validity is conducted to assess the quality of the relationship between variables/constructs. Discriminant validity can be measured using Fornell-larcker and HTMT.

Table 3. Fornell-Larcker criterion

Variables	Brand Image (Z2)	Green Marketing (X1)	Green Purchase Intention (Z1)	Usage Decision (Y)	Quality (X2)
Brand Image (Z2)	**0.875**				
Green Marketing (X1)	0.700	**0.892**			
Green Purchase Intention (Z1)	0.783	0.801	**0.886**		
Usage Decision (Y)	0.724	0.744	0.757	**0.906**	
Quality (X2)	0.740	0.723	0.796	0.741	**0.899**

In fornell-larcker, each variable must have the highest correlation with the same variable. The Green Marketing variable (X) has the root value of AVE 0.892(bold), the correlation is higher with the same variable, namely Green Marketing (X) (Hair et al., 2013). This can be interpreted as meaning that the indicators used really measure the variables they measure, not other variables (Alrizki & Dewi, 2024).

Applied Business and Administration Journal (ABAJ)
Vol. 04, No. 01, January 2025, pp.22-36
ISSN: 2828-0040

Table 4. Heterotrait-Monotrait Ratio (HTMT)

Variables	(Z2)	(X1)	(Z1)	(Y)	(X2)
Brand Image (Z2)					
Green Marketing (X1)	0.7862				
Green Purchase Intention (Z1)	0.8670	0.8945			
Usage Decision (Y)	0.8083	0.8410	0.8379		
Quality (X2)	0.8284	0.8167	0.8839	0.8302	

Measurement of discriminant validity based on HTMT values gives results of all correlations between variables <0.90, so all variables have met discriminant validity.

Collinearity test

Collinearity test is needed to find out whether the relationship between variables is in accordance with the conceptual framework that has been built previously. Collinearity is measured based on the VIF value with the provision of VIF < 5 (Hair et al., 2013).

Table 5. Inner VIF Values

Variables	(Z2)	(Z1)	(Y)
Brand Image (Z2)			2,531
Green Marketing (X1)	2,955	2,094	2,396
Green Purchase Intention (Z1)	3,851		
Usage Decision (Y)			
Quality (X2)	2,889	2,094	2,703

The Inner VIF value gives the result that all variables have VIF < 5 which indicates that there is no collinearity between independent variables. If all variables have fulfilled all measurement models, then continue with the evaluation of the structural model.

B. Structural Model Evaluation

Hypothesis Testing

The hypothesis in this study is divided into two types, namely direct influence and indirect influence. The hypothesis tested is based on the conceptual framework that has been built previously.

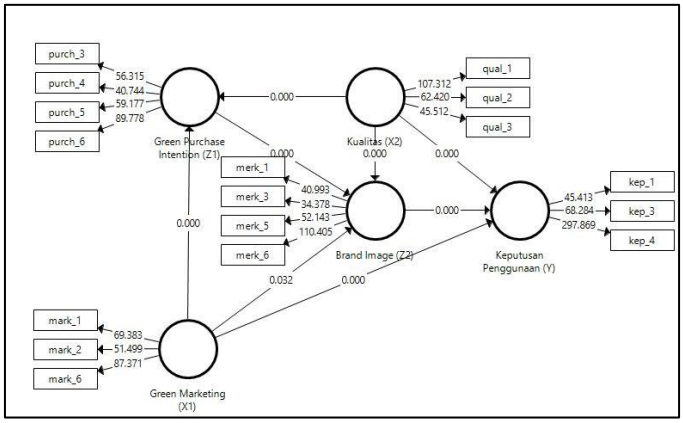

Applied Business and Administration Journal (ABAJ)
Vol. 04, No. 01, January 2025, pp.22-36
ISSN: 2828-0040

Figure 3. Structural model of electric vehicle usage decisions.

Direct effect

There are eight hypotheses in the form of direct influence that need to be proven significant within a 5% error level based on the p-value and also the t-statistic value with the provisions of p-value < 0.05 and t-statistic > 1.96.

Table 6. Direct effect hypothesis test

Hypothesis	Path Coefficient	t stat	p value	Results
H_1: Green Marketing (X1) -> Green Purchase Intention (Z1)	0.473	10,146	0,000	Accepted
H_2: Green Marketing (X1) -> Brand Image (Z2)	0.134	2,142	0.033	Accepted
H_3: Green Marketing (X1) -> Usage Decision (Y)	0.347	5,749	0,000	Accepted
H_4: Quality (X2) -> Green Purchase Intention (Z1)	0.454	9,333	0,000	Accepted
H_5: Quality (X2) -> Brand Image (Z2)	0.287	4,181	0,000	Accepted
H_6: Quality (X2) -> Usage Decision (Y)	0.297	4,877	0,000	Accepted
H_7: Green Purchase Intention (Z1) -> Brand Image (Z2)	0.447	6,156	0,000	Accepted
H_8: Brand Image (Z2) -> Usage Decision (Y)	0.261	4,254	0,000	Accepted

H_1: There is a direct influence of Green Marketing (X1) onGreen Purchase Intention (Z1)

The first hypothesis is accepted because the direct influence of Green Marketing (X1) on Green Purchase Intention (Z1) has a t-statistic (10.146 > 1.96) and significantp-value (0.000 < 0.05) with a path coefficient of 0.473. In line with the findings (Yaputra et al., 2023)which states thatGreen marketing has a significant effect on green purchase intention with a p-value of 0.000 with a path coefficient of 0.378. By implementing an effective green marketing strategy, companies can not only increase sales but also make a positive contribution to the environment. Green marketing increases consumer awareness of the importance of protecting the environment. When consumers understand the negative impacts of their consumption on the environment, they tend to choose more environmentally friendly products.

H_2: There is a direct influence of Green Marketing (X1) on Brand Image (Z2).

The second hypothesis is accepted because the direct influence of Green Marketing (X1) on Brand Image (Z2) has a t-statistic (2.142 > 1.96) and significantp-value of 0.033 < 0.05 and path coefficient of 0.134. This is in line with (Alrizki & Dewi, 2024).Green marketing has a very positive influence on brand image. By implementing effective green marketing strategies, companies can build a strong brand image, increase customer loyalty, and gain long-term benefits. Green marketing allows companies to communicate deeper values, such as environmental awareness and social responsibility. This can strengthen the emotional connection between consumers and brands (Yaputra et al., 2023). Companies that implement

green marketing tend to have a better reputation in the eyes of the public. Consumers are more likely to trust and support companies that are environmentally responsible.

H_3: There is a direct influence of Green Marketing (X1) on the Decision to Use Electric Vehicles (Y).

The third hypothesis is accepted because of the direct influence of Green Marketing (X1) on Electric Vehicle Usage Decision (Y). has a t-statistic (5.749 > 1.96) and significantp-value (0.000 < 0.005) with a path coefficient of 0.347. Green marketing has a very important role in encouraging consumers to choose electric vehicles. By increasing environmental awareness, forming positive perceptions, and supporting government policies, green marketing can accelerate the transition to more sustainable transportation. Green marketing plays a major role in increasing consumer awareness of the importance of protecting the environment. When consumers understand the negative impacts of fossil fuel vehicle use on air pollution and climate change, they tend to look for more environmentally friendly alternatives such as electric vehicles.

H_4: There is a direct influence of Quality (X2) onGreen Purchase Intention (Z1).

The third hypothesis is accepted because of the direct influenceQuality (X2) against*Green Purchase Intention (Z1)*has a t-statistic (9.333 > 1.96) and significantp-value (0.000 < 0.05) with a path coefficient of 0.454.Product quality is a crucial factor that greatly influences consumer intention to buy green products (green purchase intention). When consumers consider buying environmentally friendly products, they not only consider the environmental aspect, but also the quality of the product itself. Product quality is a complementary factor with the environmental aspect in driving green purchase intention. Consumers want products that are not only environmentally friendly, but also have good quality (Yaputra et al., 2023). Thus, companies that want to be successful in marketing green products must pay attention to both environmental aspects and the quality of their products.

H_5:There is a direct influence of Quality (X2) on Brand Image (Z2).

The fifth hypothesis is accepted because the direct influence of Quality (X2) on Brand Image (Z2) has a t-statistic (4.181 > 1.96) and significantp-value (0.000 < 0.005) and path coefficient 0.287. High quality products will build consumer trust in the brand. When consumers are satisfied with the quality of the products they have purchased, they tend to be more loyal to the brand and more open to trying other green products from the same brand.

H_6: There is a direct influence of Quality (X2) on the Decision to Use Electric Vehicles (Y).

The sixth hypothesis is accepted because the direct influence of Quality (X2) on the Decision to Use Electric Vehicles (Y) has a t-statistic (4.887 < 1.96) and a significant p-value (0.000 < 0.005) with a path coefficient0.297.The quality of an electric vehicle greatly influences a person's decision to use it. The better the quality offered, the more likely a person will choose an electric vehicle. This quality covers various aspects, from vehicle performance (acceleration, mileage), driving comfort, to the reliability and durability of its components. If a person feels that the quality of the electric vehicle he is using or considering is very good, he will be more confident and satisfied with his choice.

H_7:There is a direct influence of GreenPurchase Intention (Z1) towardsBrand Image (Z2).

Applied Business and Administration Journal (ABAJ)
Vol. 04, No. 01, January 2025, pp.22-36
ISSN: 2828-0040

The seventh hypothesis is accepted because of the direct influence of GreenPurchase Intention (Z1) towardsBrand Image (Z2) has a t-statistic (6.156 > 1.96) and significant p-value (0.000 < 0.05).Green purchase intention or the intention to buy environmentally friendly products has a direct influence on brand image. When someone has a strong intention to buy sustainable products, brands that are synonymous with environmentally friendly products will get a positive perception in the eyes of consumers. Conversely, brands that do not show a commitment to the environment will tend to have a less good image. In other words, the intention to buy environmentally friendly products can improve or decrease a company's brand image.

H_8:There is a direct influence of Brand Image (Z2) on the Decision to Use Electric Vehicles (Y).

The eighth hypothesis is accepted because the direct influence of Brand Image (Z2) on the Decision to Use Electric Vehicles (Y) has a t-statistic (4.254 > 1.96) and significant p-value (0.000 < 0.005).A strong and positive brand image will greatly influence a person's decision to use an electric vehicle. If an electric vehicle brand has a good reputation for quality, innovation, and commitment to the environment, consumers will be more likely to choose products from that brand. Conversely, if the brand image is not good, consumers will be hesitant to use the product, even though the electric vehicle technically has good quality. A strong brand image can build consumer trust and be a determining factor in purchasing decisions.

Indirect effect

To test the hypothesis with an indirect form of influence, it can be seen based on table 7 below.

Table 7. Hypothesis test of indirect effect

Hypothesis	Path Coefficient	t stat	p-value	Results
H_9: Green Marketing (X1) -> Green Purchase Intention (Z1) -> Brand Image (Z2) -> Usage Decision (Y)	0.055	3,165	0.002	Accepted
H_{10}: Green Marketing (X1) -> Brand Image (Z2) -> Usage Decision (Y)	**0.035**	**1,873**	**0.062**	**Rejected**
H_{11}: Quality (X2) -> Green Purchase Intention (Z1) -> Brand Image (Z2) -> Usage Decision (Y)	0.053	2,905	0.004	Accepted
H_{12}: Quality (X2) -> Brand Image (Z2) -> Usage Decision (Y)	0.075	3,415	0.001	Accepted
H_{13}: Green Marketing (X1) -> Green Purchase Intention (Z1) -> Brand Image (Z2)	0.212	5,320	0,000	Accepted
H_{14}: Quality (X2) -> Green Purchase Intention (Z1) -> Brand Image (Z2)	0.203	4,958	0,000	Accepted
H_{15}: Green Purchase Intention (Z1) -> Brand Image (Z2) -> Usage Decision (Y)	0.117	3,240	0.001	Accepted

H_9: There is an indirect influence of Green Marketing (X1) on the Decision to Use Electric Vehicles (Y) through GreenPurchase Intention (Z1) and Brand Image (Z2).

The ninth hypothesis is accepted because the t-statistic (3,165> 1.96) and significantp-value (0.002 < 0.005) with a path coefficient of 0.055.Green Marketing indirectly influences electric vehicle purchasing decisions through two stages. Continuous Green Marketing messages will instill awareness of the importance of electric vehicles for the environment in the minds of consumers (Nandaika & Respati, 2021). The stronger this awareness, the greater the consumer's intention to buy electric vehicles. Effective Green Marketing will build a positive and environmentally conscious brand image. Consumers who have a positive perception of a brand will be more likely to choose products from that brand, including electric vehicles. Green Marketing plays an important role in encouraging consumers to choose electric vehicles. By continuously highlighting environmental and sustainability aspects, automotive companies can increase consumer awareness, shape purchase intentions, and strengthen their brand image. This will ultimately have an impact on increasing sales of electric vehicles.

H_{10}:There is an indirect influence of Green Marketing (X1) on the Decision to Use Electric Vehicles (Y through Brand Image (Z2).

The tenth hypothesis is rejected because the t-statistic (1.873 < 1.96) and not significantp-value (0.062 > 0.05) with a path coefficient of 0.035. According to (Sugiyono, 2017)If the path coefficient is less than 0.05 then the path can be removed.Logically, there are several possible reasons why green marketing does not have an indirect influence on the decision to use electric vehicles through brand image. Consumers Prioritize Other Factors, Consumers may focus more on the performance of electric vehicles, such as range, charging speed, and acceleration. Economic factors are often the main consideration, especially the availability of government incentives and the operating costs of electric vehicles.

H_{11}:There is an indirect influence of Quality (X2) on the Decision to Use Electric Vehicles (Y) through GreenPurchase Intention (Z1) and Brand Image (Z2).

The eleventh hypothesis is accepted because the t-statistic (2,905 > 1.96) and significantp-value (0.04 < 0.05) with a path coefficient of 0.053.Product quality, especially electric vehicles, plays a very crucial role in influencing consumer purchasing decisions. Quality does not only refer to technical aspects such as performance, battery life, or advanced features, but also includes the quality of after-sales service, design, and materials used. When consumers feel that electric vehicles are of high quality and reliable, they will be more confident that the product is environmentally friendly and in accordance with the manufacturer's claims. High-quality electric vehicles will enhance the brand's reputation in the eyes of consumers. Brands known for quality products will be considered more credible and trustworthy in terms of commitment to the environment. A strong brand image and high purchase intention encourage consumers to choose electric vehicles from that brand.

H_{12}:There is an indirect influence of Quality (X2) on the Decision to Use Electric Vehicles (Y) throughBrand Image (Z2).

The twelfth hypothesis is accepted because the t-statistic (3,415> 1.96) and significantp-value (0.001 < 0.05) with a path coefficient of 0.075.Product quality has a very significant influence on the decision to purchase electric vehicles. Good quality not only increases consumer purchasing intentions but also strengthens the company's brand image. Therefore, electric vehicle manufacturers need to continue to improve the quality of their products in order to compete in an increasingly competitive market.

H_{13}: There is an indirect influence of Green Marketing (X1) on Brand Image (Z2) through Green Purchase Intention (Z1).

The thirteenth hypothesis is accepted becauset-statistic (5,320> 1.96) and significant p-value (0.000 < 0.05) with a path coefficient of 0.212. Effective Green Marketing will create strong Green Purchase Intention in consumers (Yaputra et al., 2023). Consumers will be more interested in environmentally friendly and sustainable products. This high Green Purchase Intention will then strengthen the company's Brand Image. Consumers will see the company as a leader in sustainability, thereby increasing their trust and loyalty to the brand. The stronger the Brand Image that is formed, the more likely consumers are to recommend the product to others, thus expanding the reach of Green Purchase Intention and further strengthening the Brand Image.

H_{14}: There is an indirect influence of Quality (X2) on Brand Image (Z2) through Green Purchase Intention (Z1).

The fourteenth hypothesis is accepted becauset-statistic (4,958> 1.96) and significant p-value (0.000 < 0.05) with a path coefficient of 0.203. High Product Quality will increase Green Purchase Intention. Consumers will be more confident that high-quality products are also more environmentally friendly and sustainable. Strong Green Purchase Intention will then strengthen Brand Image. Consumers will associate product quality with the company's commitment to sustainability, thereby increasing positive perceptions of the brand. Consumers who are satisfied with product quality will recommend it to others, thereby increasing brand awareness and strengthening Brand Image positively.

H_{15}: There is an indirect influence of Green Purchase Intention (Z1) on Usage Decisions (Y) through Brand Image (Z2).

The fifteenth hypothesis is accepted becauset-statistic (3,240> 1.96) and significant with a p-value of 0.001 < 0.05 with a path coefficient of 0.117.High Green Purchase Intention will encourage consumers to choose products that are in line with their sustainability values. A strong Brand Image will strengthen the purchasing decision. Consumers will feel more confident in their choice because the brand has proven to be committed to the environment. Customer Loyalty, consumers who have purchased products based on strong Green Purchase Intention and Brand Image tend to be loyal customers. They will continue to choose products from that brand in the future. The three factors above are interrelated and form a mutually reinforcing cycle. Effective Green Marketing will create high Green Purchase Intention, which will then strengthen the company's Brand Image. This strong Brand Image will further strengthen Green Purchase Intention and encourage consumers to continue to choose products from that brand. In the context of electric vehicles, product quality, Green Marketing, and Brand Image play a very important role in driving mass adoption of electric vehicles.

Applied Business and Administration Journal (ABAJ)
Vol. 04, No. 01, January 2025, pp.22-36
ISSN: 2828-0040

C. Goodness of Fit

In the next stage after hypothesis testing, according to (Ringle et al., 2014) The magnitude of the influence of the independent variable on the dependent variable can be seen based on the R-square value.

Table 8. R square

Variables	R Square
Brand Image (Z2)	0.657
Green Purchase Intention (Z1)	0.740
Usage Decision (Y)	0.667

The Brand Image variable (Z2) has an R-square value of 0.657, which means that Brand Image (Z2) is influenced by Green Marketing (X1), Quality (X2) and Green Purchase Intention (Z2) by 65.7%. While 34.3% is influenced by other variables not measured in this study.

The Green Purchase Intention (Z1) variable has the largest R-square value with a value of 0.740. This means that Green Purchase Intention (Z1) is influenced by Green Marketing (X1) and Quality (X2) by 74%. With an R-square of 74%, it can be a serious reference on how to attract attention to price so that someone buys a product by paying attention to green marketing and the quality of a product.

The decision variable of Usage Decision (Y) has an R-square value of 0.667. A person's decision to switch to using an electric vehicle is influenced by Green Marketing (X1), Quality (X2) and Brand Image (Z1) by 66.7%. These three factors must be maintained in order to be a consideration for someone to choose an electric vehicle.

Then to find out to what extent the research results can explain empirical data. The researcher compared the RMSE value of the linear regression model (LM) with the model used by the researcher, namely the RMSE value of the Partial Least Square (PLS) model.(Hair et al., 2013).

Table 9. Comparison of RMSE of LM model with PLS model.

PLS			LM			PLS-LM
Indicator	RMSE	Q^2 prediction	Indicator	RMSE	Q^2 prediction	RMSE
brand_6	0.837	0.507	brand_6	0.829	0.518	0.008
brand_3	1,039	0.402	brand_3	1,049	0.391	-0.01
brand_1	1,003	0.412	brand_1	0.975	0.445	0.028
brand_5	1,019	0.495	brand_5	1,016	0.497	0.003
purch_3	0.873	0.554	purch_3	0.864	0.562	0.009
purch_4	0.949	0.504	purch_4	0.94	0.514	0.009
purch_5	0.829	0.592	purch_5	0.834	0.588	-0.005
purch_6	0.841	0.651	purch_6	0.85	0.644	-0.009
kep_4	0.739	0.56	kep_4	0.735	0.565	0.004
kep_3	0.883	0.549	kep_3	0.887	0.545	-0.004
kep_1	0.908	0.436	kep_1	0.916	0.426	-0.008

In assessing the strength of research using the RMSE value, the provision applies that the smaller the RMSE value, the stronger the research in explaining empirical data. Based on the table above, it can be seen that there are 6 indicators in the PLS model that have a lower RMSE value compared to the linear regression model, namely the indicatormerk_6, merk_1, merk_5, purch_3, purch_4 and kep_4. This means that the strength of the research model used is medium (Lachowicz et al., 2019).

CONCLUSION

Green Marketing has a positive and significant influence on the Decision to use electric vehicles. Green marketing has a very important role in encouraging consumers to choose electric vehicles. By increasing environmental awareness, forming positive perceptions, green marketing can accelerate the transition to more sustainable transportation.

Quality has a positive and significant effect on the decision to use electric vehicles. The quality of electric vehicles greatly influences a person's decision to use them. The better the quality offered, the more likely a person will choose an electric vehicle.

Brand Image has a positive and significant effect on the Decision to use electric vehicles. A strong and positive brand image will greatly influence a person's decision to use an electric vehicle. If an electric vehicle brand has a good reputation for quality, innovation, and commitment to the environment, consumers will be more likely to choose products from that brand.

At the structural level, the decision to use electric vehicles is most influenced by Green Purchase Intention through Brand Image with a path coefficient of0.117.A strong brand image will strengthen the purchasing decision. Consumers will feel more confident in their choice because the brand has proven to be committed to the environment.

REFERENCES

Alrizki, G., & Dewi, CK (2024). The Influence of Green Marketing on Green Buying Behavior Through Environmental Knowledge: A Study on Unilever Indonesia Gilang. Al-Kharaj: Journal of Economics, Finance & Islamic Business, 6(3), 4054. https://doi.org/10.47467/alkharaj.v6i3.6208

Dharmawan, IP, Kumara, INS, & Budiastra, IN (2021). Development of Electric Vehicle Battery Charging Infrastructure in Indonesia. SPEKTRUM Journal, 8(3), 91. https://kemdikbud.go.id

Hair, J.F., Ringle, C.M., & Sarstedt, M. (2013). Editorial Partial Least Squares Structural Equation Modeling: Rigorous Applications, Better Results and Higher Acceptance. ELSEVIER, 46(12), 46. https://doi.org/10.1016/j.lrp.2013.01.001

Ministry of Transportation. (2023). Phase Out Scheme of Internal Combustion Engine Vehicles Towards Battery Electric Vehicles. Transportation Policy Agency, Ministry of Transportation. www.baketrans@kemenhub.go.id

Kurniawan, I., & Husin, AE (2023). Analysis of Influential Factors in the Implementation of Green Concepts to Improve Cost Performance using Structural Equation Modeling-Partial Least Square (SEM-PLS). TEKNIK, 44(1), 2. https://doi.org/10.14710/teknik.v44i1.49522

Kusumawati, A., & Tiarawati, M. (2022). The Influence of Green Perceived Risk and Green Packaging on Green Purchase Intention on Avoskin Skincare Products (Consumer Study on Purchase Intention of Avoskin Products). Scientific Journal of Social, Economic, Cultural, Technology and Education SIBATIK JOURNAL, 1(10), 20175. https://doi.org/https://doi.org/10.54443/sibatik.v1i10.305

Lachowicz, J., Preacher, K., & Kacperczyk, K. (2019). A Novel Measure of Effect Size for Mediation Analysis. Journal of Business Ethics, 161(3), 633–635. http://www.emerald.com/insight/content/doi/10.1108/O1437731111161O58/full/html

Nandaika, ME, & Respati, NNR (2021). The Role of Brand Image in Mediating the Influence of Green Marketing on Purchasing Decisions (A Study of Uniqlo Brand Fashion Products in Denpasar). E-Journal of Management, Udayana University, 10(6), 547. https://doi.org/https://doi.org/10.24843/EJMUNUD.2021.v10.i06.p02

Osiyo, AK, & Semuel, H. (2018). The Influence of Green Marketing on Green Brand Image and Customer Purchase Intention at Starbucks Coffee Malang. Journal of Marketing Strategy, 5(2), 2. petra.ac.id

Prasetyo, MM, & Wibowo, S. (2023). Analysis of the Influence of Brand Image, Product Quality and Price Perception on Consumer Satisfaction and Repurchase Intention. Dynamic Management Journal, 1(2), 65. https://doi.org/10.59330/jmd.v1i2.14

Resmawa, IN (2017). The Influence of Brand Image and Product Knowledge on Purchase Intention with Green Price as a Moderating Variable on The Body Shop Products in Surabaya. Journal of Management, Economics and Business Applications, 1(2), 3.

Ringle, C. M., Silva, D. da, & Bido, D. (2014). Structural equation modeling with the smartpls. REMark – Revista Brasileira de Marketing, 13(2), 58. https://doi.org/10.5585/remark.v13i2.2717

Saidani, B. (2019). Analysis of the Influence of Website Quality and Trust on Customer Satisfaction in Forming Repurchase Interest in Shopee Customers. Indonesian Journal of Management Science Research (JRMSI), 10(2), 428. https://doi.org/http://doi.org/10.21009/JRMSI

Shiddiq. (2024). Staffsus Minister of Energy and Mineral Resources: Electric Vehicle Population in April 2024 Reaches 133,225 Units. Media Nikel Indonesia. www.nikel.co.id

Sugiyono. (2017). Statistics for Research (A. Nuryanto (ed.); 2nd printing). Alfabeta. www.cvalfabeta.com

Yahya. (2022). The Role of Green Marketing, Green Brand Image on Purchase Intention with Green Trust as an Intervening Variable. JIMBis: Scientific Journal of Management and Business, 1(1), 20.

Yaputra, H., Kurniawati, Renny, R., Lukito, N., & Prabowo, K. (2023). The Influence of Green Marketing, Sustainable Advertising, Eco Packaging / Labeling on Green Purchasing Behavior (Study on Electric Vehicles). Journal of Indonesia Marketing Association (IMA), 2(1), 73. https://journal-ima.org